24B Metal hoods/housings
- for high voltage inserts(HVE Series)

Degree of protection： IP67

Housings, cable to cable

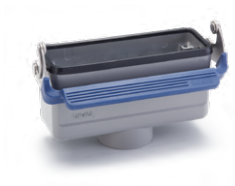

Thread	Designation	Order No.
M25	WV24B-CCT-1L/SC-M25	124 124 721 1001
PG21	WV24B-CCT-1L/SC-PG21	124 124 721 1002

Please refer to page 15-02 for choosing proper model of lock.

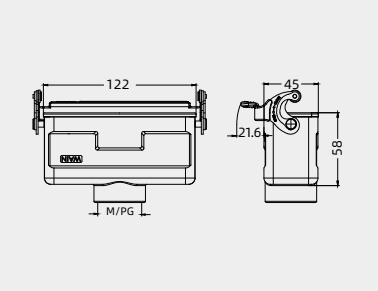

Housings, cable to cable, high construction

Thread	Designation	Order No.
M32	WV24B-CCTH-1L/SC-M32	124 124 721 5001
M40	WV24B-CCTH-1L/SC-M40	124 124 721 5002
PG21	WV24B-CCTH-1L/SC-PG21	124 124 721 5003
PG29	WV24B-CCTH-1L/SC-PG29 with sleeve	124 124 721 5004
M32	WV24B-CCTH-1L/SC-M32 WS	124 124 721 5005
PG21	WV24B-CCTH-1L/SC-PG21 WS	124 124 721 5011
PG29	WV24B-CCTH-1L/SC-PG29 WS	124 124 721 5012

Please refer to page 15-02 for choosing proper model of lock.

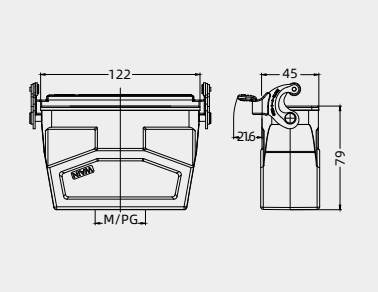

Bulkhead mounted housings

Thread	Designation	Order No.
---	WV24B-BK-1L/SC	124 124 321 1101
	with plastic cover	
---	WV24B-BK-1L/SC-CV	111 124 321 8003
	with metal cover	
---	WV24B-BK-1L/SC-MCV	111 124 321 8004
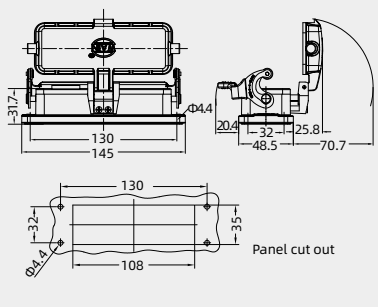
Please refer to page 15-02 for choosing proper model of lock.